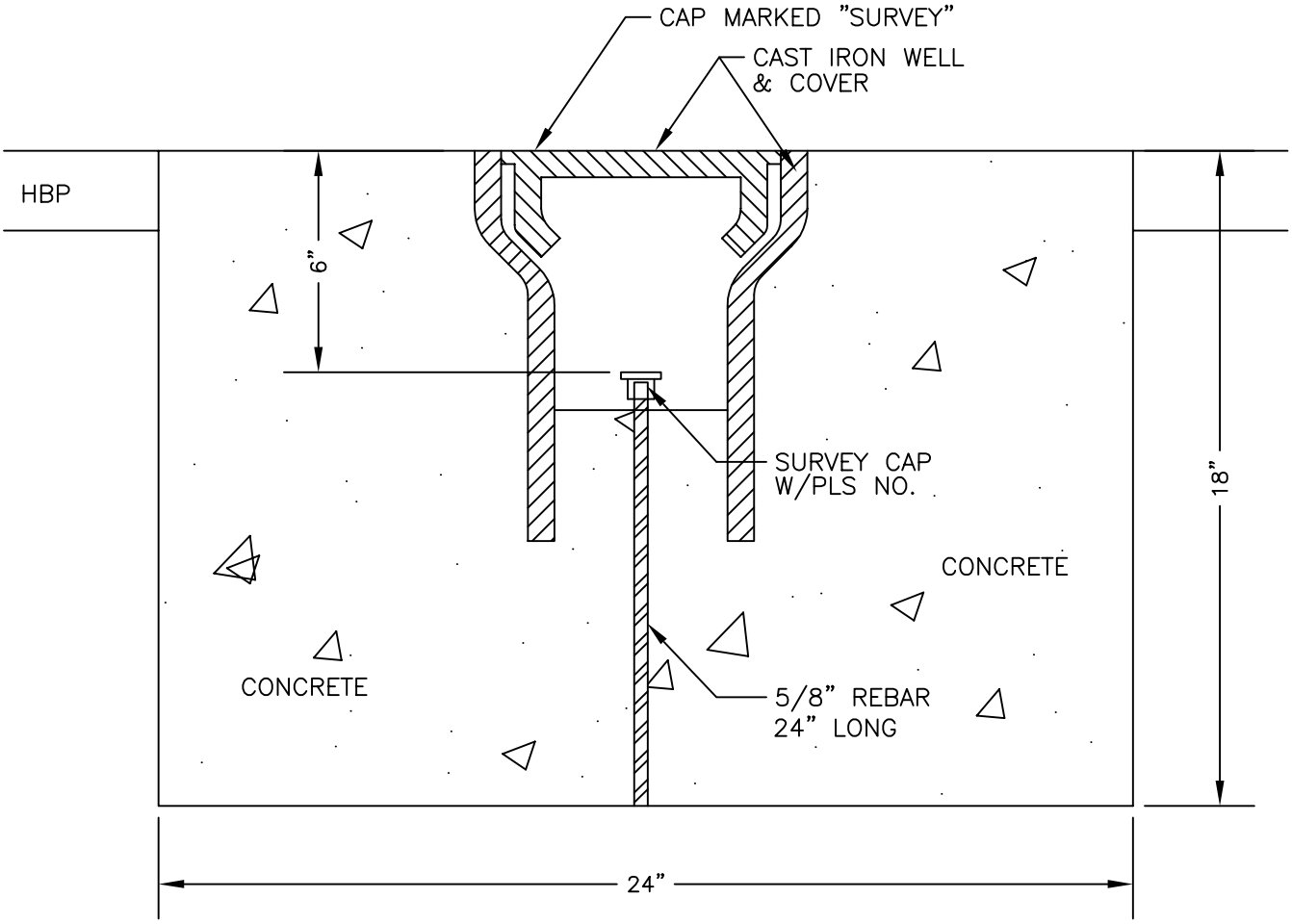

City of DELTA

CITY of DELTA
360 MAIN STREET
DELTA, CO 81416

STREET INTERSECTION
MONUMENT DETAIL

DATE: OCTOBER 2009 | SHEET R30 OF 30