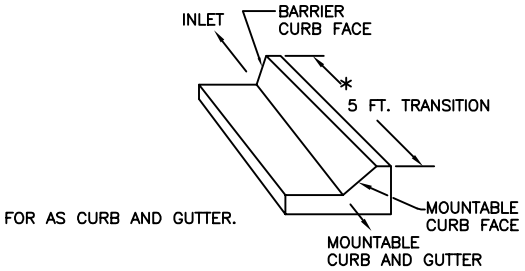

TRANSITION CURB

MEET SHAPE OF NORMAL BARRIER

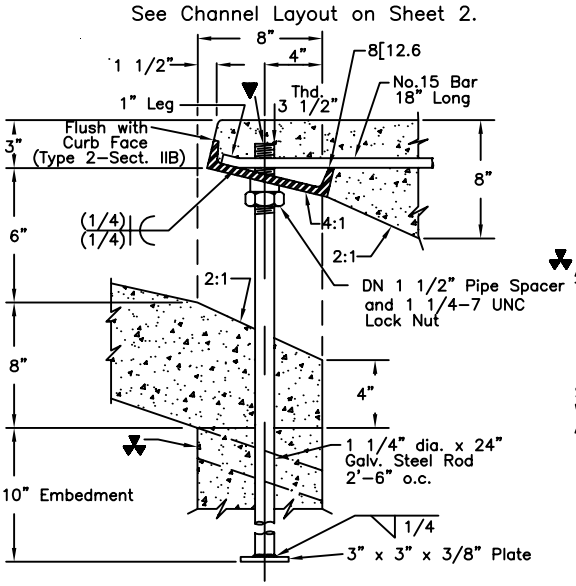

▼CURB FACE ASSEMBLY,
PLACE ENTIRE ASSEMBLY BEFORE POURING CONCRETE

▲– FOR A 1'-0" PAN SLOPE 6:1

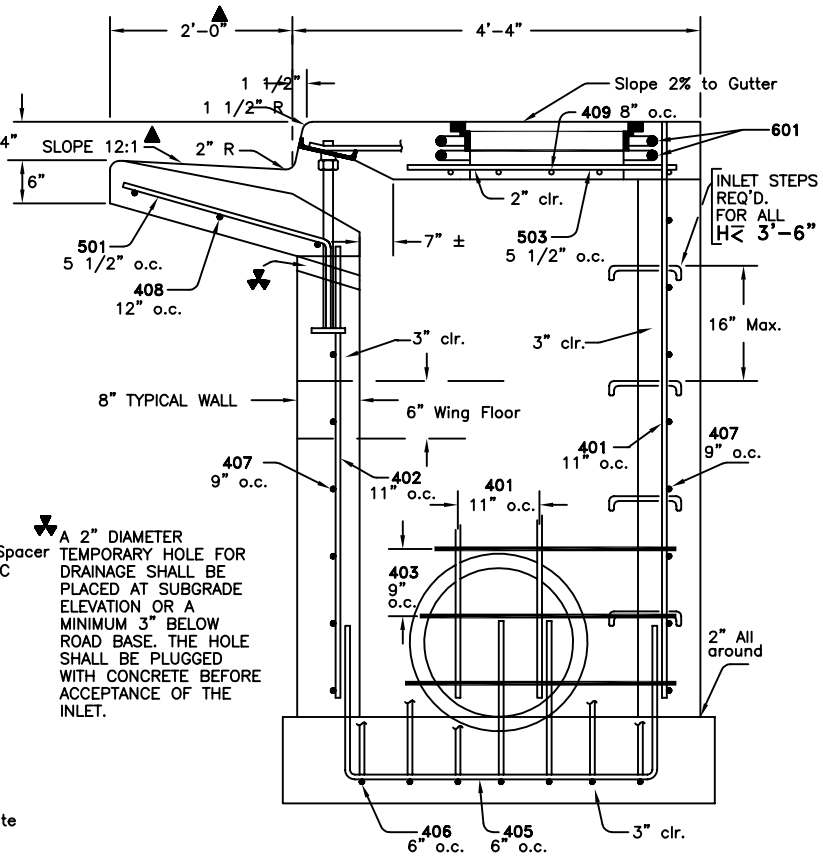

▼A 2" DIAMETER TEMPORARY HOLE FOR DRAINAGE SHALL BE PLACED AT SUBGRADE ELEVATION OR A MINIMUM 3" BELOW ROAD BASE. THE HOLE SHALL BE PLUGGED WITH CONCRETE BEFORE ACCEPTANCE OF THE INLET.

SECTION B–B
TYPICAL END VIEW

NOTE: MANHOLE RING & COVER, STATION POINT AND OUTFLOW PIPE SHALL BE LOCATED AT THE SAME END OF THE INLET.

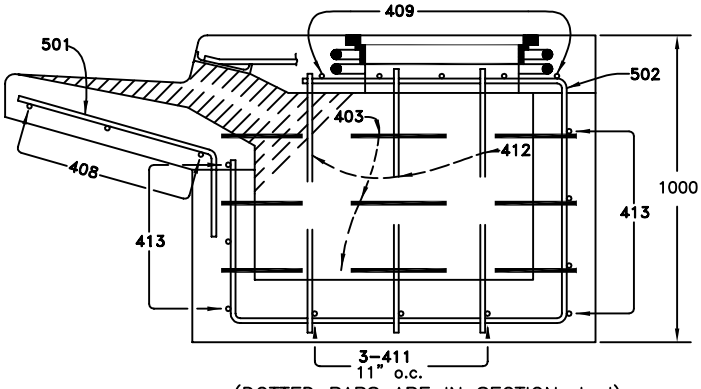

(DOTTED BARS ARE IN SECTION d–d)
SECTIONS c–c & d–d

City of DELTA

CITY of DELTA
360 MAIN STREET
DELTA, CO 81416

CURB INLET TYPE R

SHEET 2 OF 4

DATE: OCTOBER 2009 | SHEET R26 OF 30