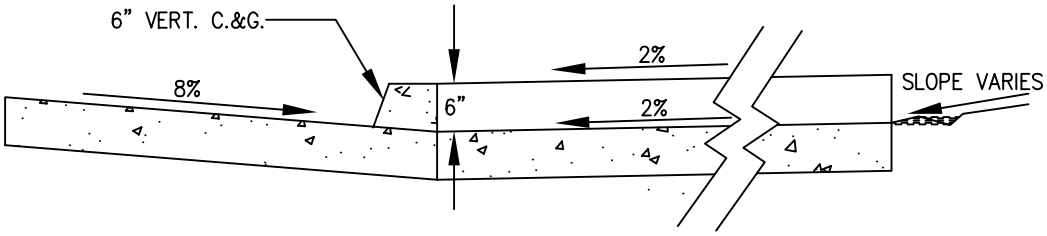


SECTION B–B

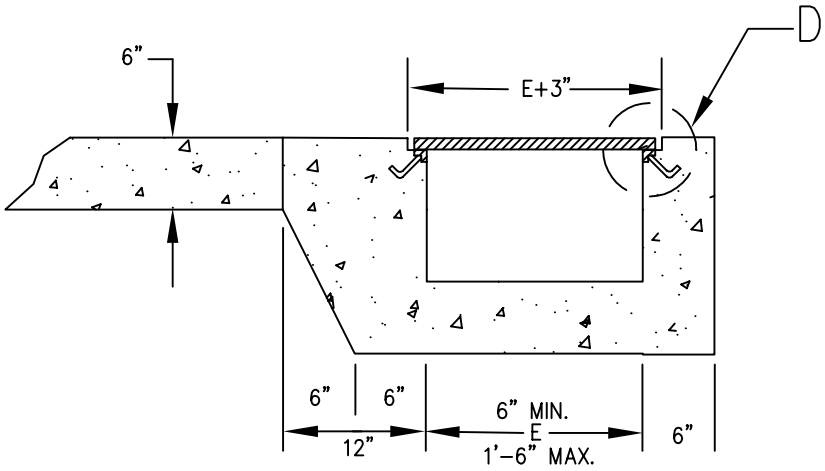


SECTION C–C

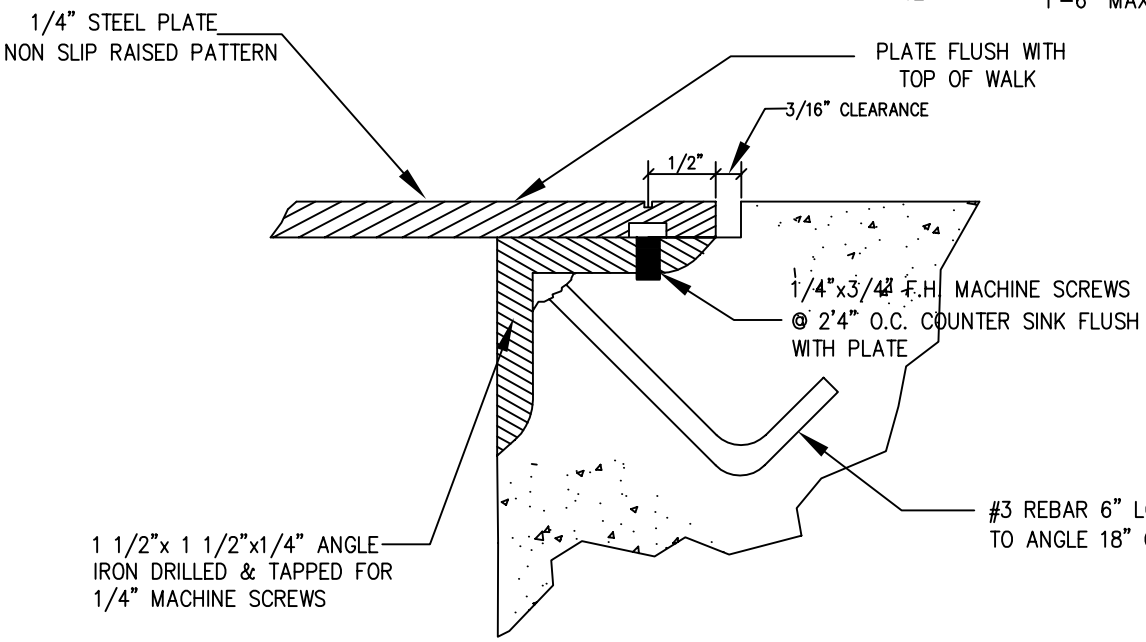


DETAIL D

MULTIPLE CHASE

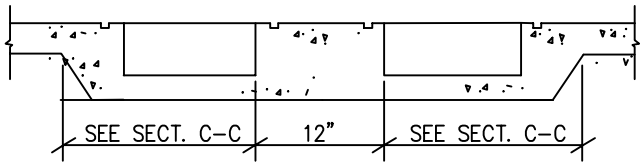


City of DELTA

CITY of DELTA
360 MAIN STREET
DELTA, CO 81416

CHASE DRAIN DETAILS

DATE: OCTOBER 2009

SHEET R24 OF 30