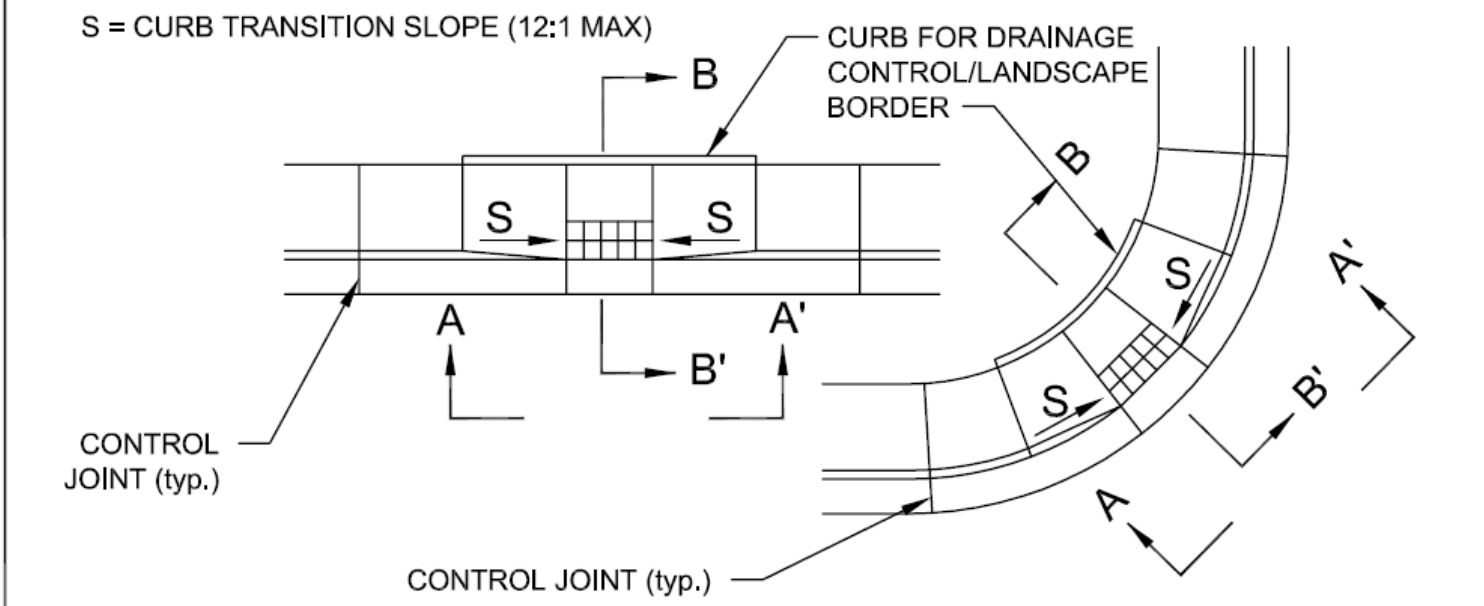

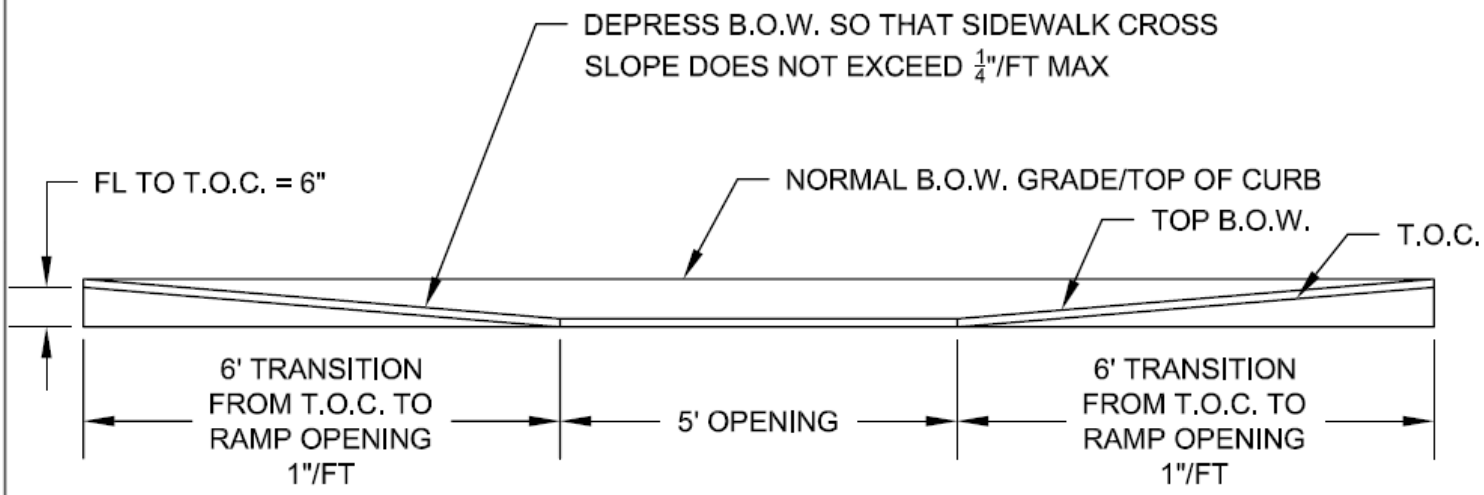

SECTION A-A'
RAMP PROFILE

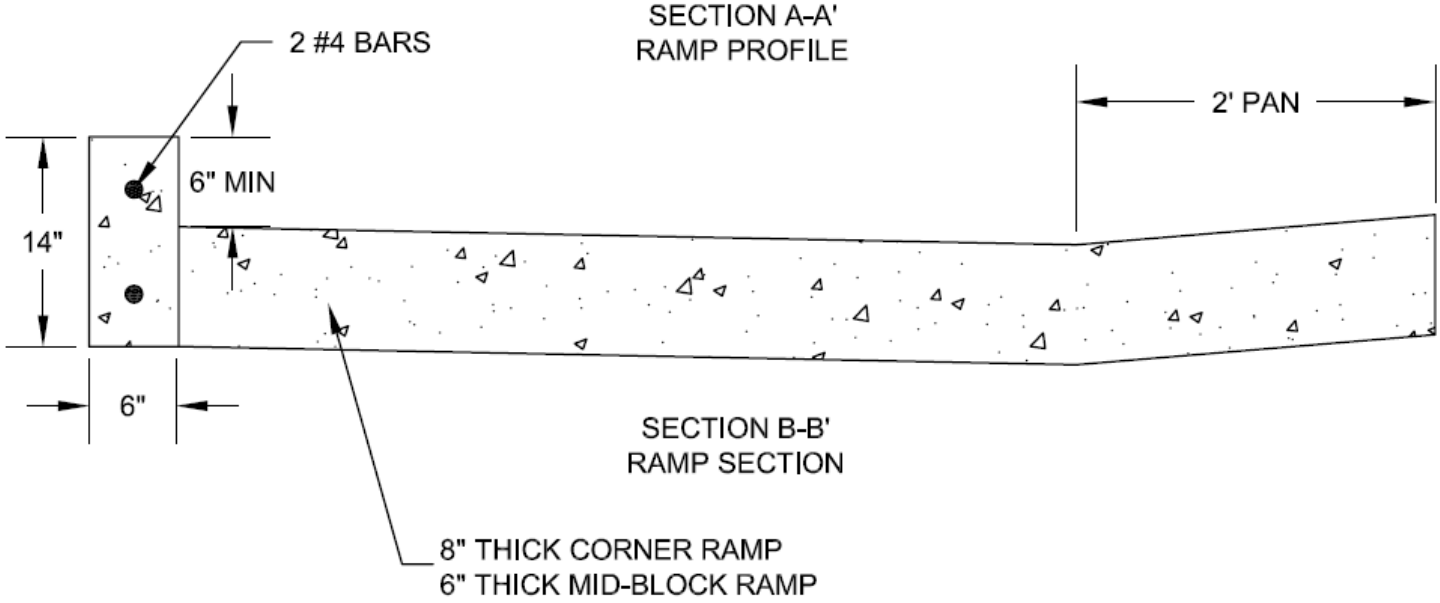

SECTION B-B'
RAMP SECTION

City of DELTA

CITY of DELTA
360 MAIN STREET
DELTA, CO 81416

ALTERNATE ADA RAMP WITHOUT LANDING

DATE: OCTOBER 2009 | SHEET R18 OF 30