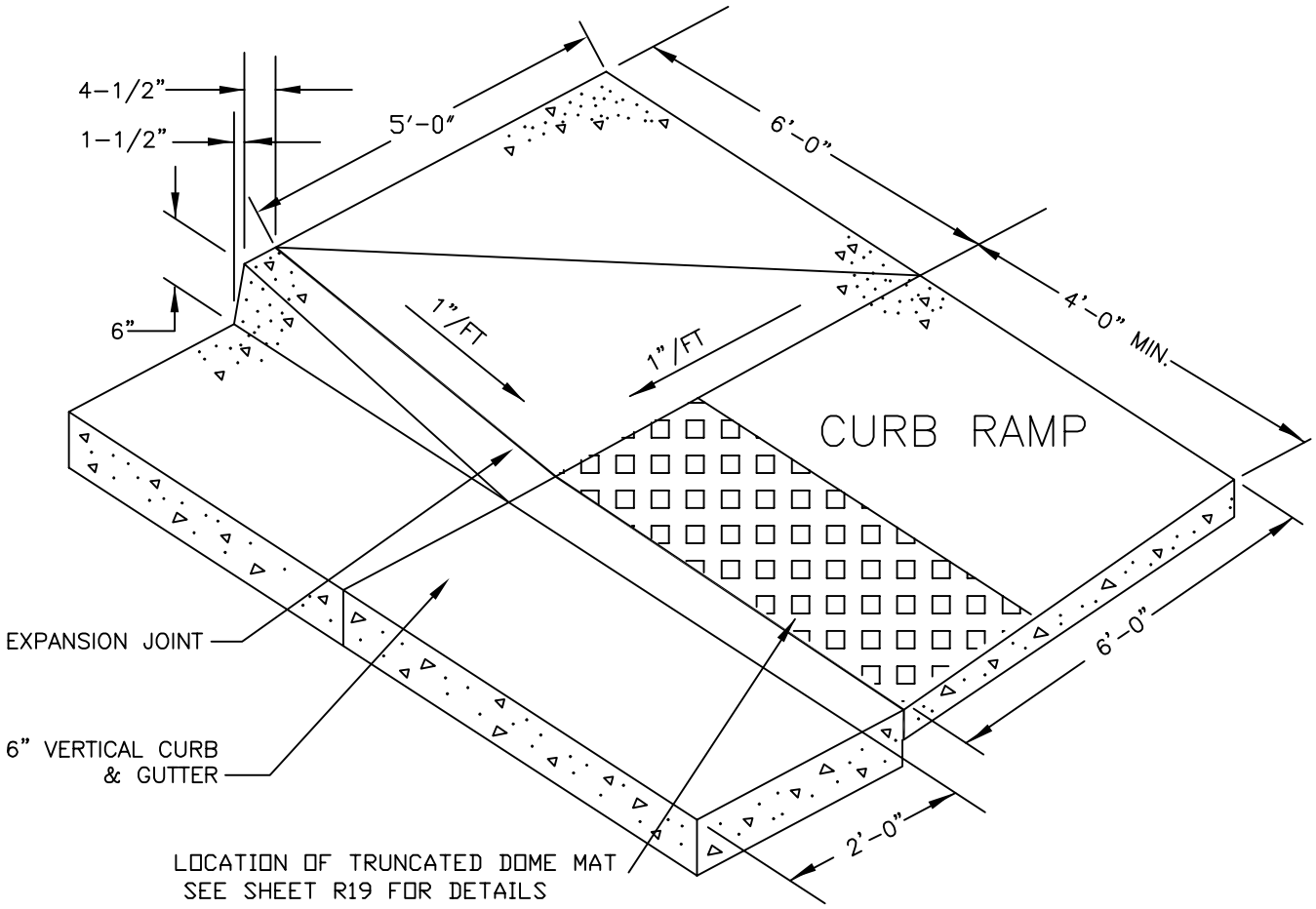

NOTE:

* COARSE BROOM FINISH ON RAMP.
* SPECIAL DESIGNS ARE REQUIRED WHEN GRADES ARE OVER 4% OR WHERE THE ANGLE OF THE INTERSECTION IS LESS THAN 78 DEGREES OR MORE THAN 105 DEGREES.
* MAINTAIN BACK OF WALK ELEVATION AT 2.0% ABOVE TOP OF CURB.
* SEE SHEET R15 FOR PREFERRED LOCATION OF RAMPS.
* A LANDING SHALL BE PROVIDED AT THE TOP OF THE RAMP IN ACCORDANCE WITH THE ADA REQUIREMENTS. SEE SHEET R18 IF A LANDING IS NOT FEASIBLE.

City of DELTA	CITY of DELTA 360 MAIN STREET DELTA, CO 81416	CURB RAMP BARRIER CURB & ATTACHED WALK
		DATE: OCTOBER 2009 | SHEET R16 OF 30