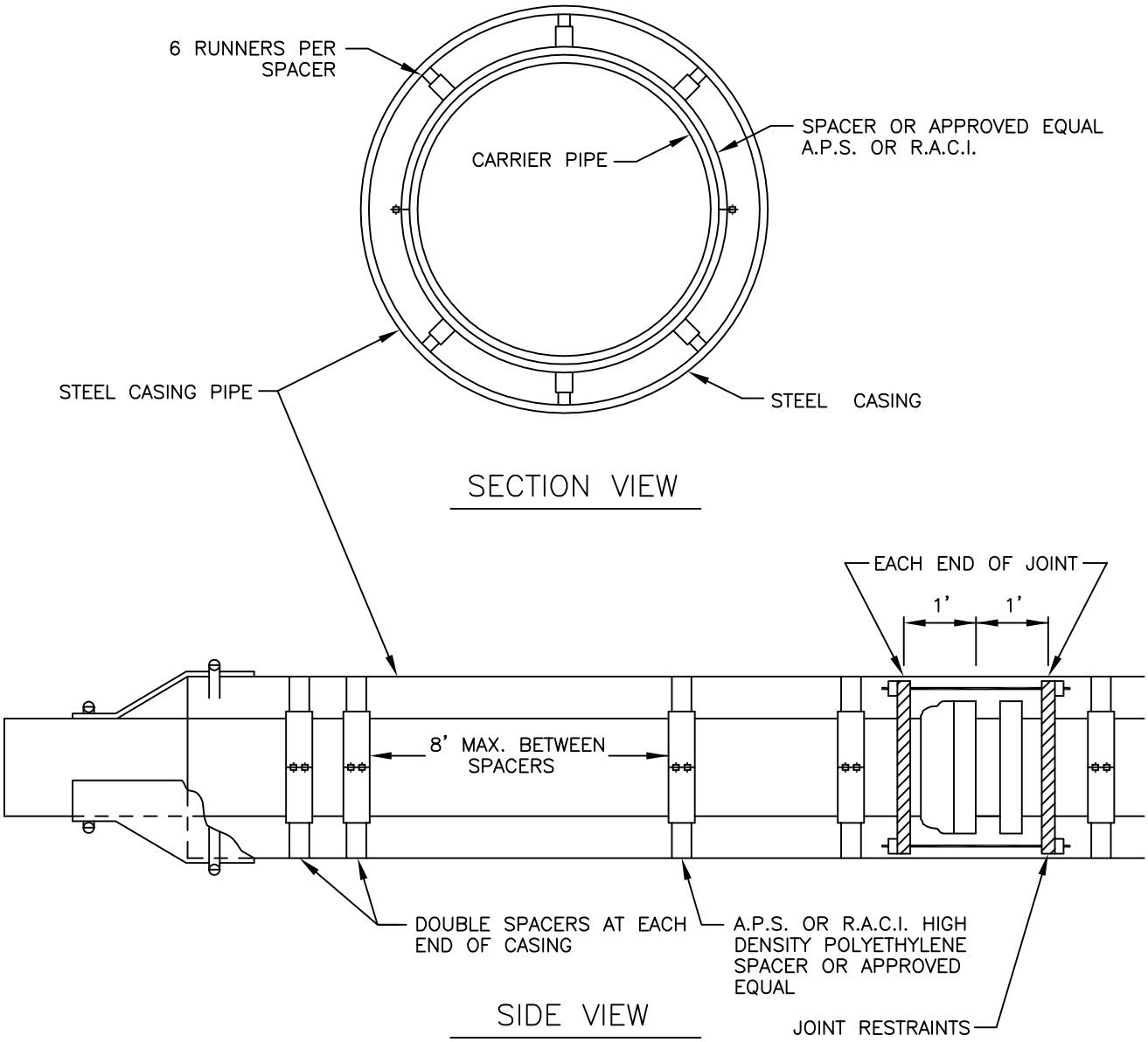

City of DELTA

CITY of DELTA
360 MAIN STREET
DELTA, CO 81416

BORING
DETAIL

DATE: DEC. 1998

SHEET SS9 OF 10