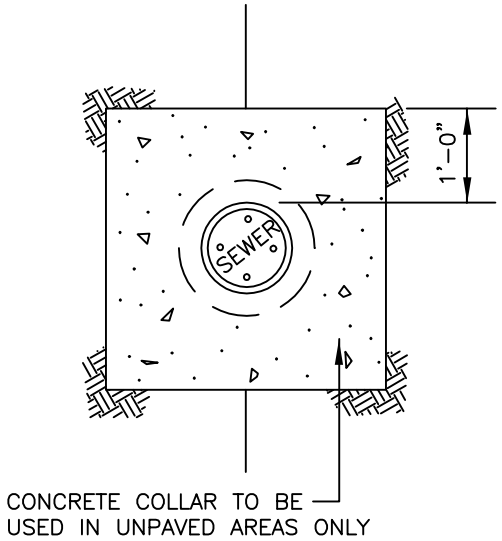

PLAN VIEW

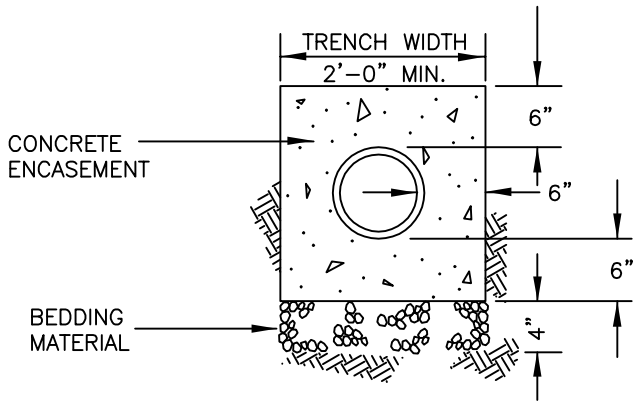

SECTION A-A

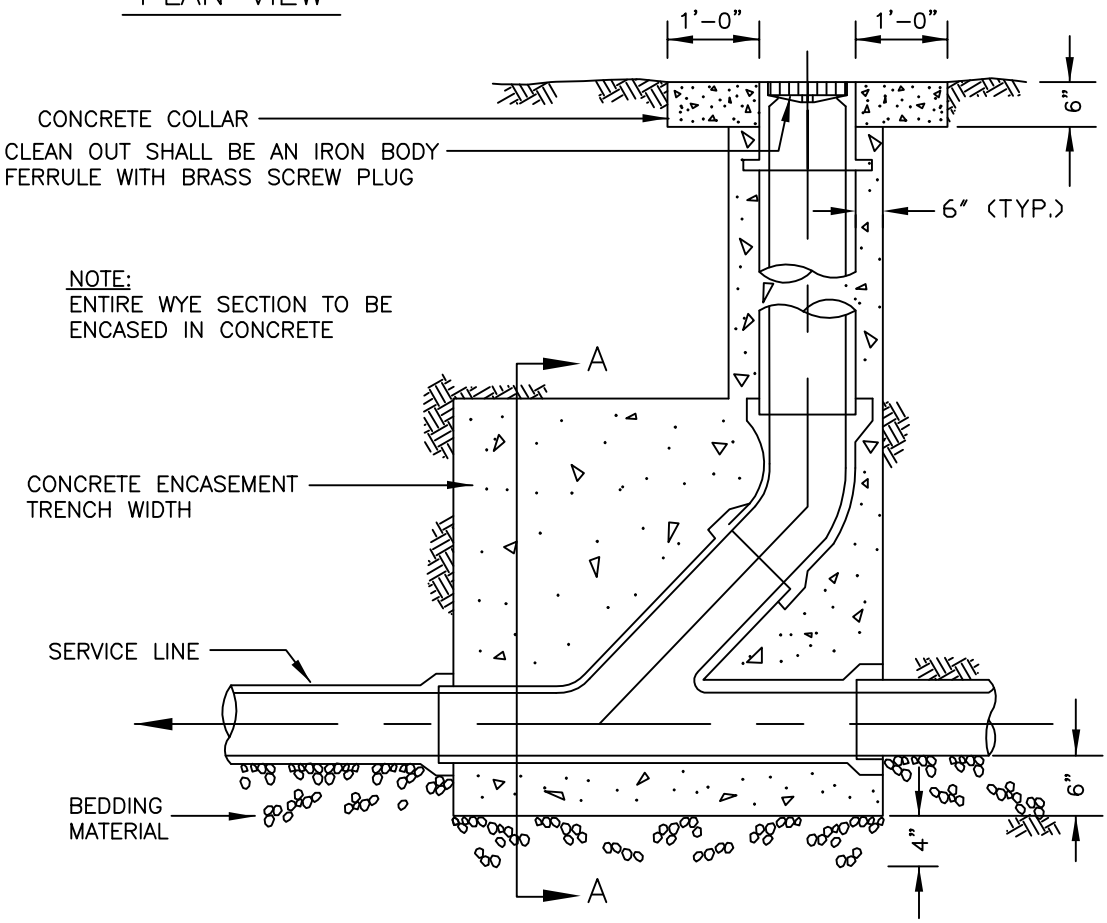

ELEVATION

N.T.S.

City of DELTA

CITY of DELTA
360 MAIN STREET
DELTA, CO 81416

STANDARD CLEAN-OUT DETAIL

DATE: DEC. 1998

SHEET SS8 OF 10