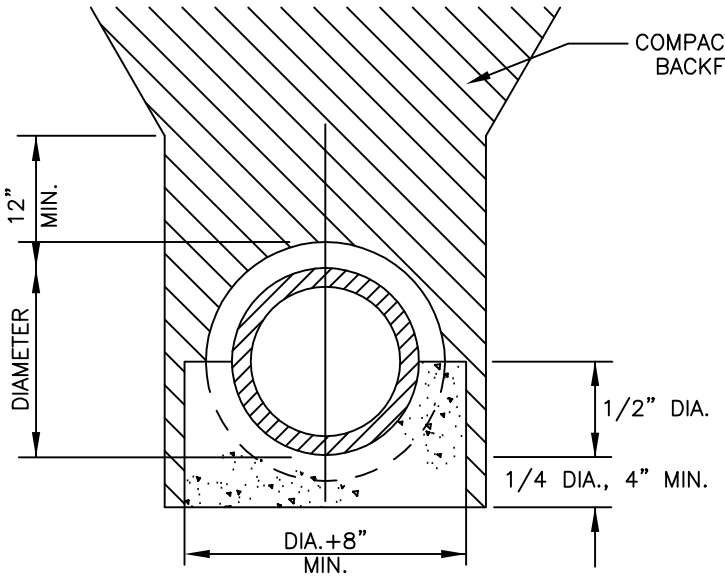

CLASS A
CONCRETE CRADLE

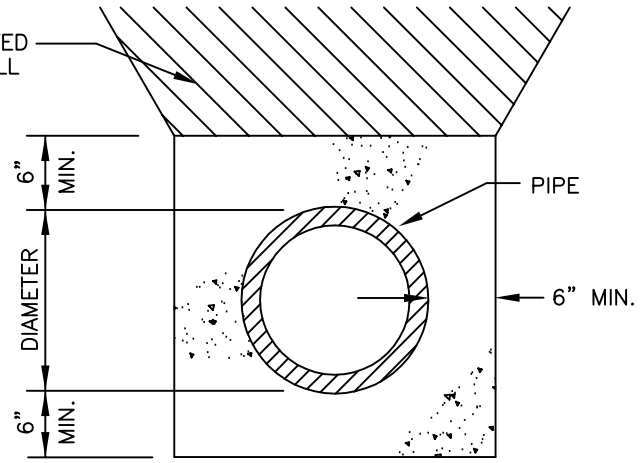

TYPICAL CONCRETE ENCASEMENT

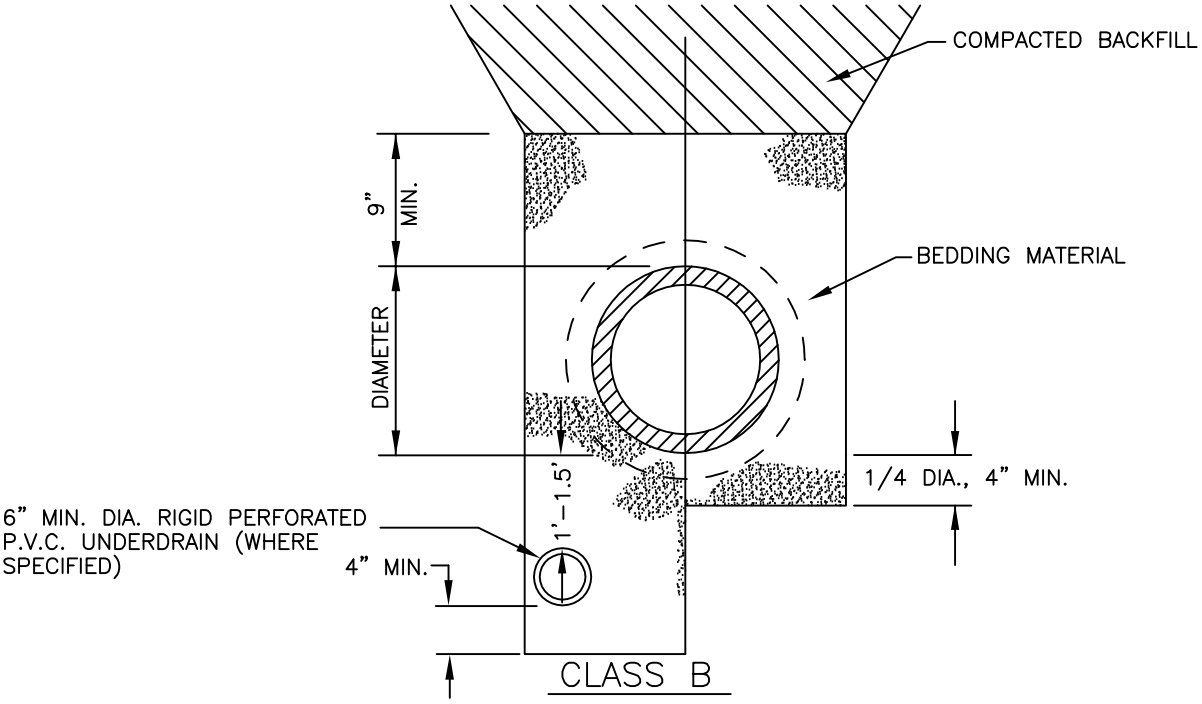

CLASS B
GRANULAR BEDDING

NOTES:

1. THIS DETAIL IS TO BE USED UNDER NORMAL CONDITIONS. WHERE EXCESSIVE GROUND WATER IS PRESENT AN ALTERNATE DESIGN WILL BE REQUIRED.

City of DELTA

CITY of DELTA
360 MAIN STREET
DELTA, CO 81416

TYPICAL PIPE
BEDDING

DATE: DEC. 1998 | SHEET SS6 OF 10