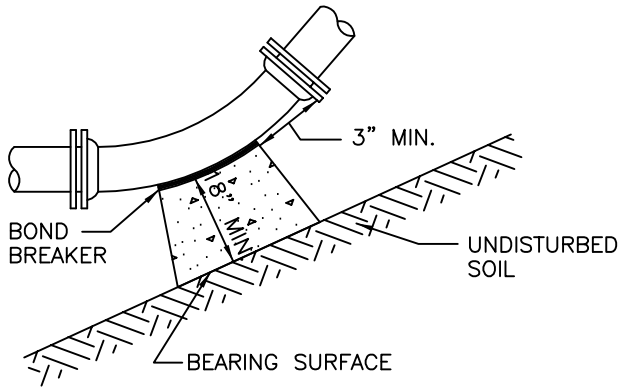

11 1/4°, 22 1/2° AND 45° BENDS

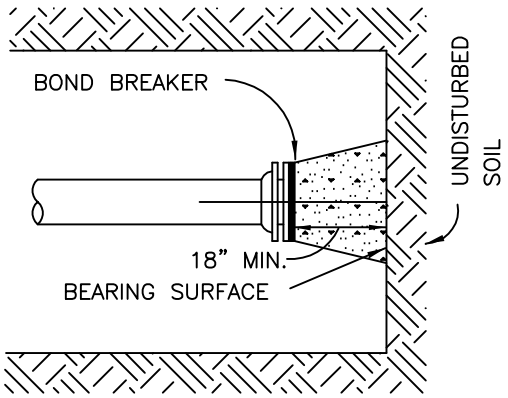

DEAD END

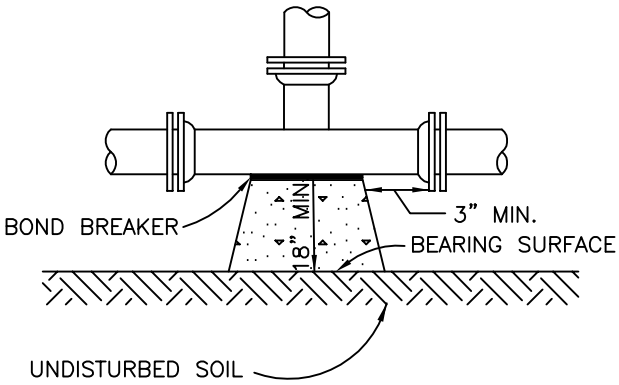

TEE

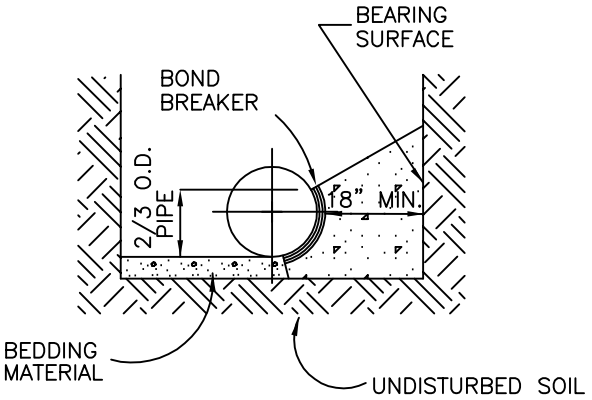

TYPICAL CROSS SECTION

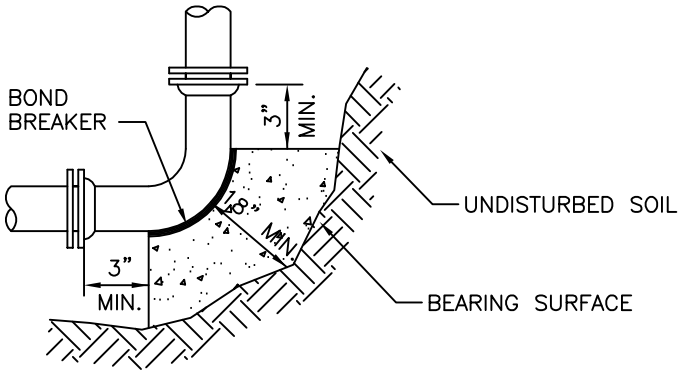

90° BEND

City of DELTA

CITY of DELTA
360 MAIN STREET
DELTA, CO 81416

CONCRETE THRUST BLOCKS

BEARING SURFACES AND INSTALLATION

DATE: DEC. 1998

SHEET W3 OF 13